Pro Frame CineGrey 4D Series

Fixed Frame Projection Screen

User's Guide – EN type

Thank you for choosing an Elite ProAV fixed frame projection screen! Please read through this user guide before utilizing the screen. Correct usage and maintenance will ensure a long product life.

Care & Use Instructions

Dust, dirt and scratches on the projection surface will affect the picture quality, please take note of the points below to prevent that from occurring:

1. Do not touch the projection surface with your hands
2. Do not write or draw on the projection surface
3. Do not use fingers or sharp objects to point on the projection surface; this will damage the screen material.
4. Use a soft-damp cloth to clean the projection surface; do not use chemical cleaning agents or alcohol.
5. Use clean water when dampening the cleaning cloth and do not rub against the material to clean it.

Hardware and Parts List

a: Frame parts x 6	b: Elbow Joints x 4	c: Center Joints x 2	d: M5*6 screw x 24
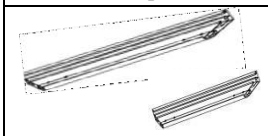	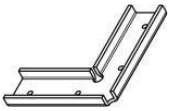		
e: Fix Plates x 50~200	f: M4*32 Wall Screw x 8	g: Ø 13*40 Anchors x 8	h: Wall Brackets x 4
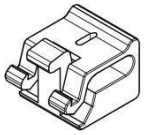			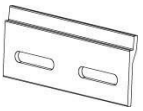
i: Center Support Bar x 1 ~ 2	j: Gloves x 2	k: Protection Sheet x 1	l: Screen Material x 1
		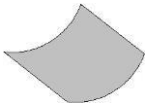	
m: Ø 12*Ø 4*1 Washers x 8	o: Screwdriver x 1		

Note: Please make sure all parts are included in your package before proceeding to assemble your fixed frame projection screen.

FRAME ASSEMBLY

First, take out all items from packaging, place the ***Protection Sheet (k)***, and put it on a clean floor, and install as follows:

1. Insert the ***Center Joints (c)*** connector to the ½ horizontal frame piece and fasten it with two ***M5*6 screws (d)***.
2. Insert the other ½ horizontal frame piece to the ***Center Joints (c)*** connector and fasten it with two ***M5*6 screws (d)***. Repeat steps 1 and 2 for assembling the second horizontal frame.

Note: Because the aluminum material has been cut, the corners of the aluminum parts have sharp edges. Please wear gloves for protection during installation.

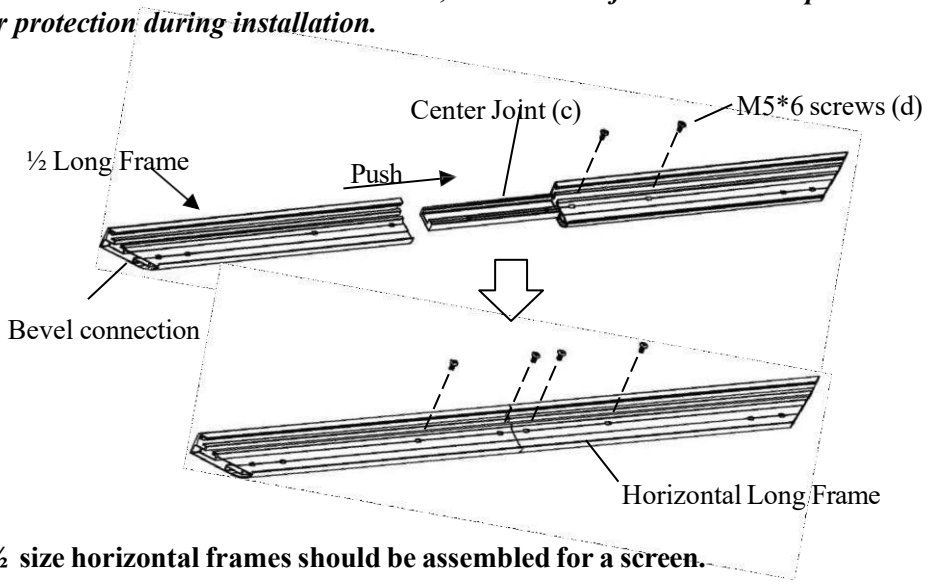

Note: a. Two ½ size horizontal frames should be assembled for a screen.

b. Do not tighten the screws completely until all frame pieces have been assembled correctly.

3. Insert both ***Elbow Joints (d)*** connectors into the slot of short vertical frame and fasten it with four ***M5*6 screws (d)*** (Fig.1.1).

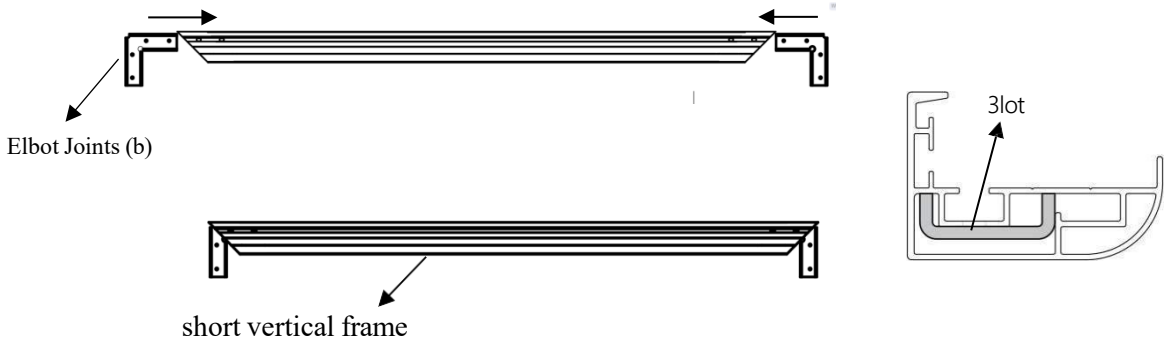

(Fig.1.1)

4. Insert the long frame into the exposed ***Elbow Joints (d)*** connectors and fasten them with ***M5*6 screws (d)*** (Fig.1.2).

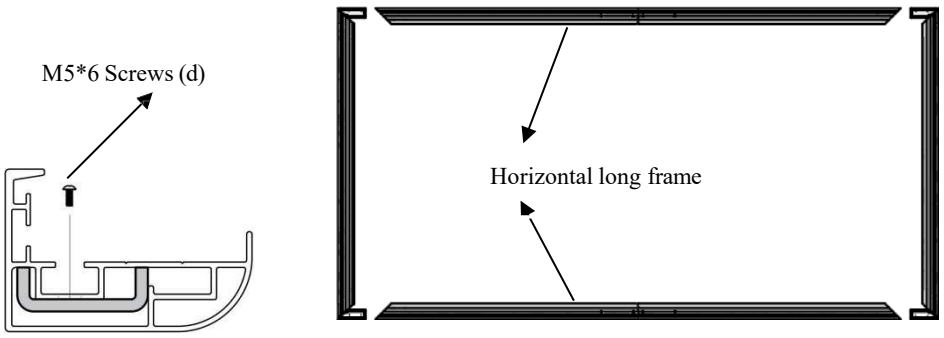

(Fig.1.2)

5. Join all four frame parts together following the steps shown below. (Fig.1.3)

Note: When assembled, please push simultaneously the two ends of the long frames.

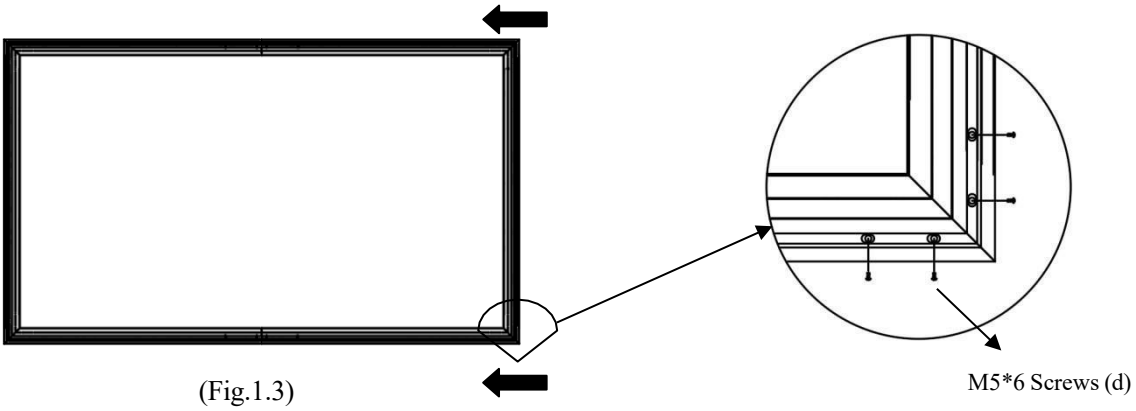

(Fig.1.3)

Attaching the screen material to the frame

1. Make sure the screen material and frame are both lying face down on a clean, dry, and non-abrasive ***Protection Sheet (k)*** and please wear installation ***Gloves (j)*** before install screen material.
2. Carefully unroll the material inside the frame. (Fig.2)

Please note the material will be noticeably smaller than the frame, as the material must be stretched to create a sufficient amount of tension for perfect material flatness.

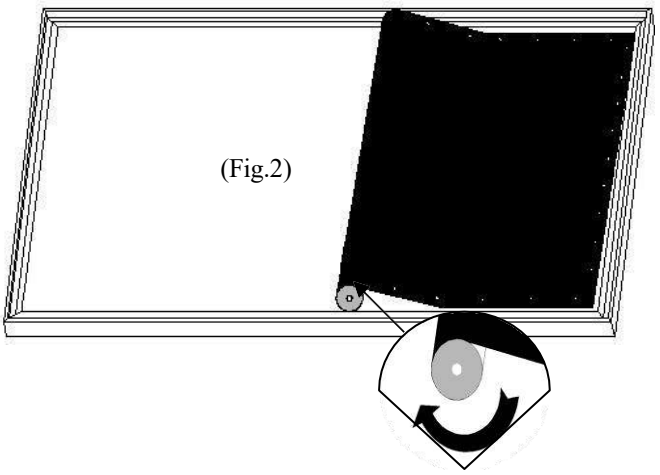

(Fig.2)

Notes：

- Make note of the label to help distinguish the back and front side.
- Unroll the screen material face down
- Keep the screen material as close as possible to the frame and do not allow it to scratch against any part of the frame.

3. Attach the fix plates.

(1) Stretch the material to the corner and insert the screen material's edge in the groove of the frame. While one hand holds the material in place the other hand snaps in the push ***Fix Plates (e)***.

(2) Begin by securing the four corners in the following sequence A→B→C→D (Fig.4).

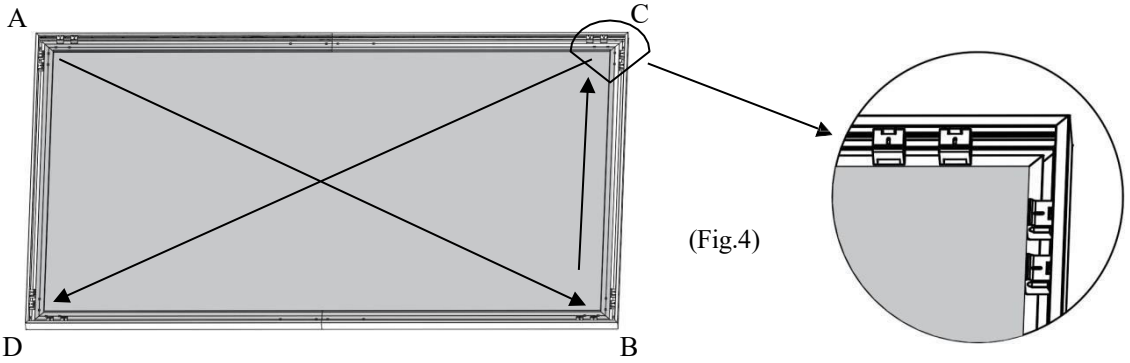

(Fig.4)

(3) Insert the ***Fix Plates (e)*** as shown on (Fig. 5). Please follow red marks on the frame and insert two fix plates for each corner first.

Fix Plates installation

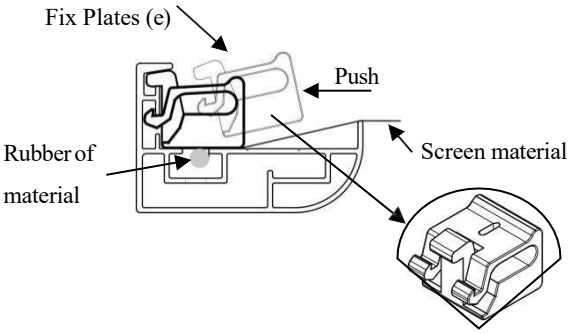

Fix Plates disassembly

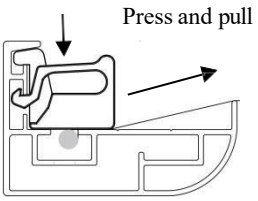

Press down on the position indicated by the arrow on the buckle and then pull it out to remove the buckle.

(Fig.5)

(4) Place a fix plate in the center of each side in the following order E→F→G→H as shown in (Fig.6).

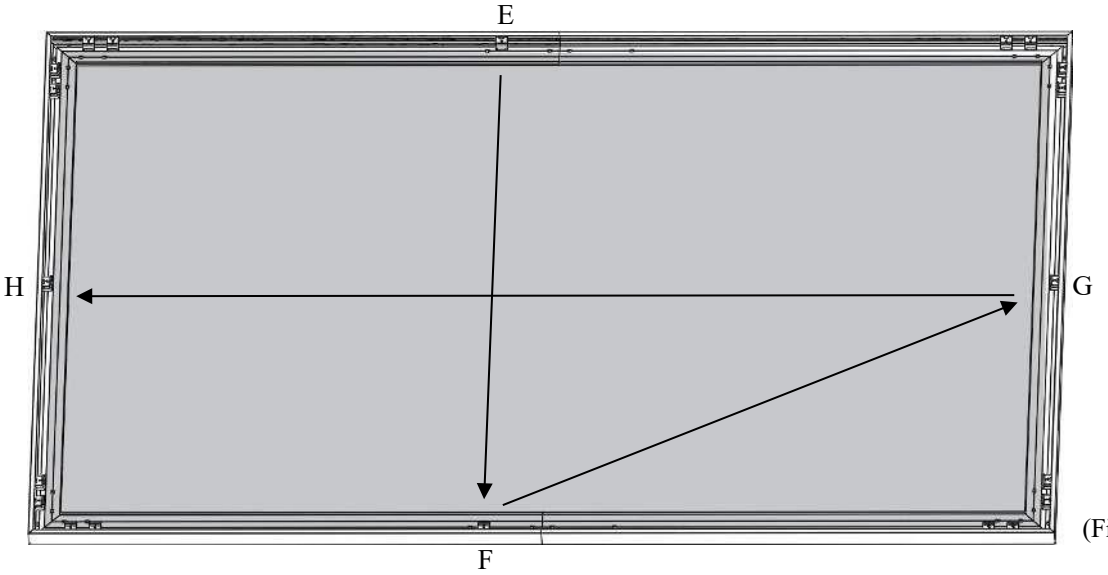

(Fig.6)

(5) Next, fasten a fix plate on the center of each frame side in the following order I→J→K→L→M→N→O→P as shown in (Fig.7).

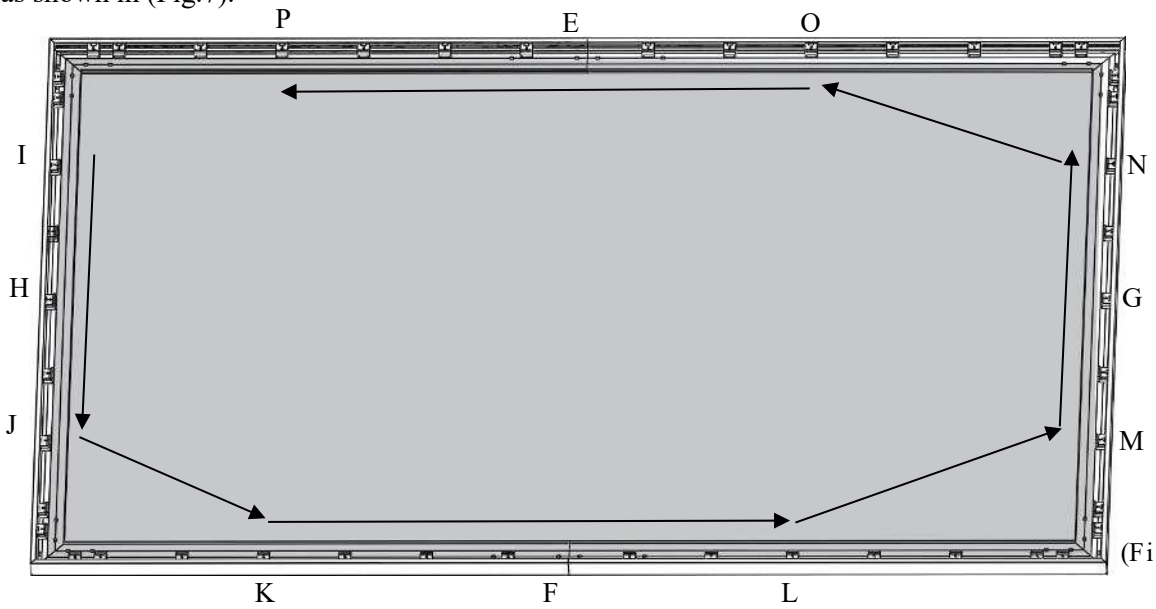

(Fig.7)

(6) Fasten the remainder of the fix plates in the empty locations in the red markings to complete attaching the screen material.

Center Support Bar

1. Insert the ***Center Support Bar (i)*** into the upper top groove on the back of the frame **(not the one where the fix plate inserts)** with the bottom end near the approximate center point of the frame and rotate it in at an angle so that both ends of the bar are in alignment with the groove **(see Fig.8 and Fig.9 below for details).**

Note: The buckle on the movement path of the support rod needs to be removed first

Diagonal models 150" (include 150") and below require 1 x Center Support Bar

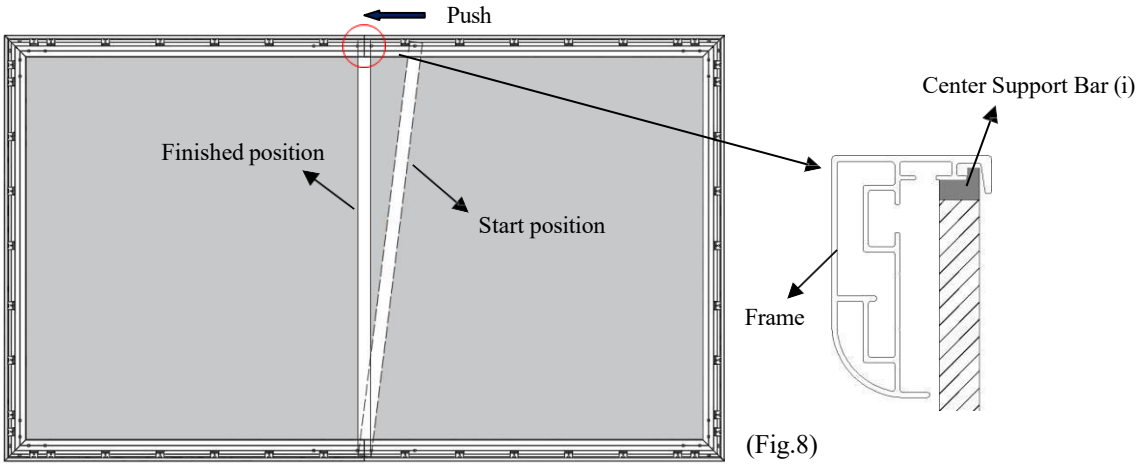

(Fig.8)

Diagonal models above 150" (Not including 150") require 2 x Center Support Bars

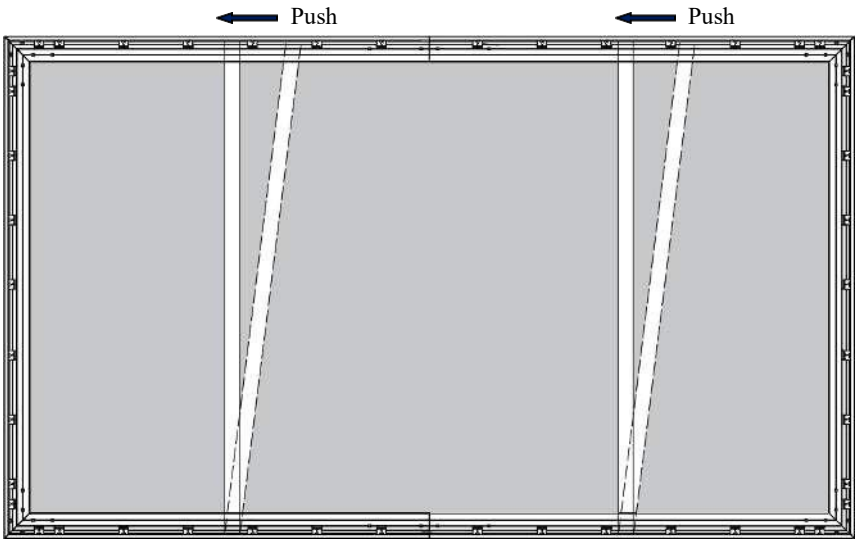

(Fig.9)

2. Slide the top end of the bar into the top center point of the frame to complete the center support bar installation. **This will provide added stability to your frame and added tension to the material.**

Notice to Installer:

Please use the following installation instructions to obtain superior optical performance from the CineGrey 4D Angular Reflective CLR®/ALR (Ceiling /Ambient Light Rejecting) Screen.

Make sure to follow these instructions in order for the CineGrey 4D to perform correctly.

- Angular-Reflective material is not compatible with ultra/short-throw projectors
- Minimum lens throw ratio 1.5x image width – For standard long throw projectors only.

Not compatible with Ultra-short or Short-throw projectors.

- Ambient light must not come from the same direction as the projector

Since angular-reflective means that the projected image will reflect at the mirror-opposite angle, it is important to position the projector so that the viewer will get the best possible image.

Step 1: Establish the general "eye level" of the viewers.

Step 2: Set the appropriate projection level.

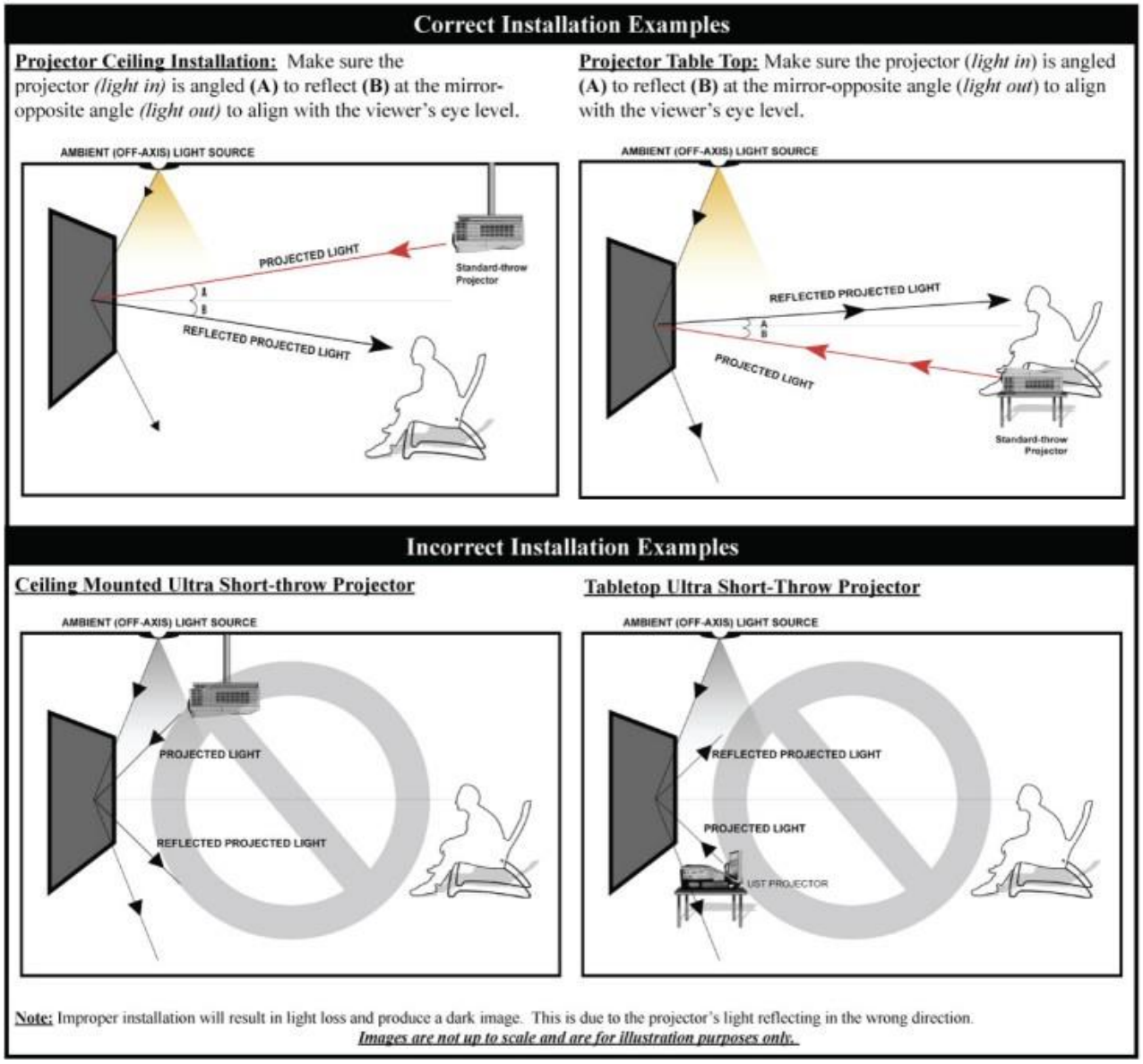

Installation

1. Locate your desired installation location with a stud finder (recommended) and mark the drill-hole area of where the screen is to be installed. Reference the table below for:

Unit: mm (inch)	100”	110”	128”	138”	158”	165”
L = Wall bracket distance	1500 (59.1”)	1500 (59.1”)	2000 (78.7”)	2000 (78.7”)	2000 (78.7”)	2500 (98.4”)
H = Top/Bottom Wall Bracket Height distance	1284 (50.6”)	1414 (55.7”)	1639 (64.5”)	1764 (69.4”)	2014 (79.3”)	2103 (82.8”)

2. Drill a hole with the proper bit size according to the ***Ø13*40 Anchors (g)*** and ***M4*32 Wall Screw (f)*** included.

3. Line up the ***Wall brackets (h)*** with the drilled holes on the installation location and screw them in using a screwdriver.

4. Position the fixed frame screen onto the top wall brackets as shown as below info and pull down at the center of the bottom frame to secure the installation.

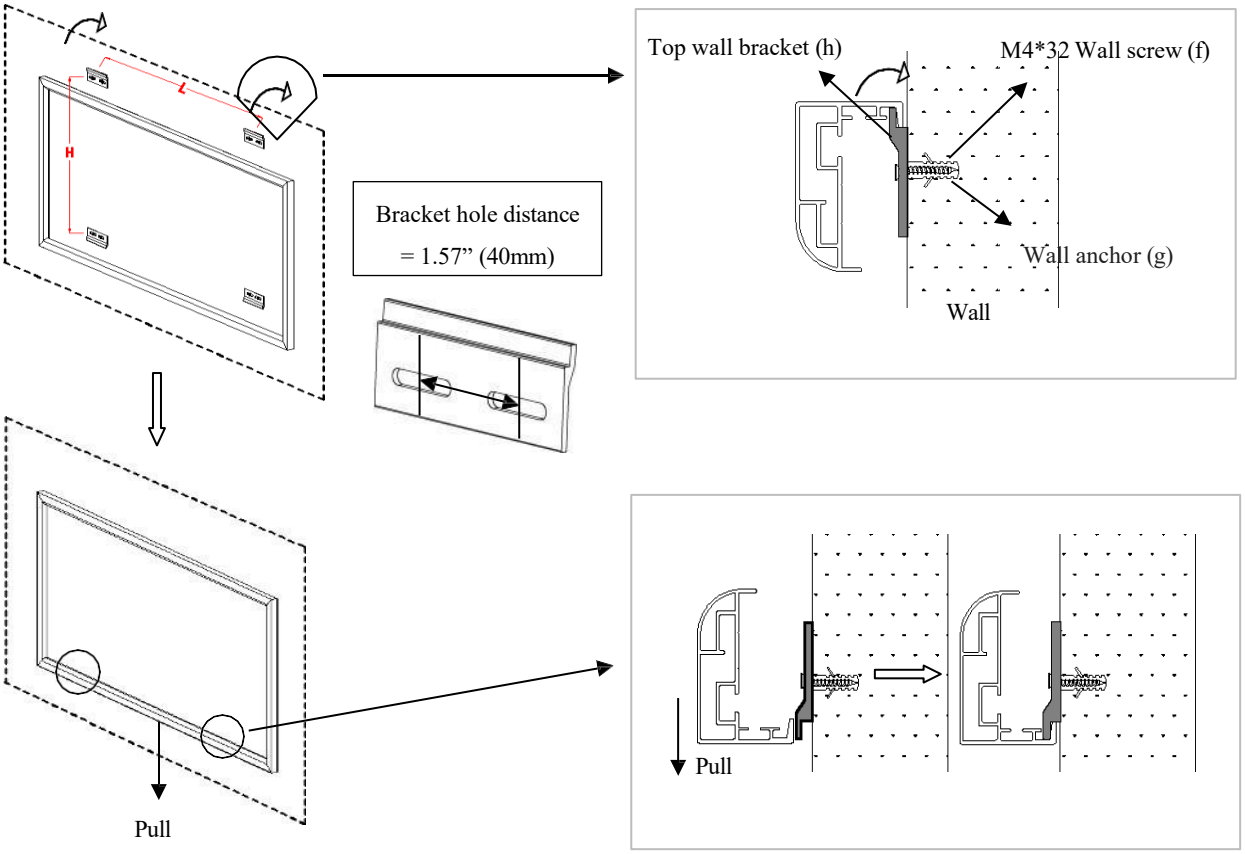

5. The design of the wall brackets allows the frame to slide over them through its sides. This is an important feature of the installation design as it allows your screen to be properly centered.

6. Using both hands finish the installation by pushing the lower portion of the fixed frame screen into the lower bracket as shown in below info.

CAUTION

Please follow these instructions carefully to ensure proper maintenance and safety of your Fixed Frame Screen.

1. When hanging the screen up, please make sure that no other objects such as power switches, outlets, furniture, ladders, windows, etc. occupy the space designated for your Fixed-Frame screen.

2. Regardless if the screen is hung on or installed into the wall, make sure that the proper mounting anchors are used and that the weight is supported appropriately by a strong and structurally sound surface just as any large and heavy picture frame should.
   (Please consult a home improvement specialist for the best advice on installation)

3. Frame parts are made of high-quality velour-surfaced aluminum and should be handled with care.

4. When not in use, cover over the screen with a furniture sheet to protect it from dirt, grime, paint or any other impurities.

5. When cleaning, use a damp soft cloth with warm water to remove any marks on the frame or screen surface.

6. Never attempt to use any solutions, chemicals or abrasive cleaners on the screen surface.

7. In order to avoid damaging the screen, avoid touching it directly with your fingers, tools or any other sharp or abrasive objects.

8. Spare Parts should be placed out of reach of small children in accordance with household safety guidelines.

Direct Sunlight Disclaimer/ Care & Use Instruction

To preserve the projection material integrity and ensure long-term flatness of the screen, please refrain from installing it in locations exposed to direct sunlight or using it as a substitute for a window curtain. Heat will cause the material to expand, causing waves and ripples to develop.
Extended exposure to solar radiation may lead to material degradation, which is not covered under the terms of our standard warranty.

See examples below.

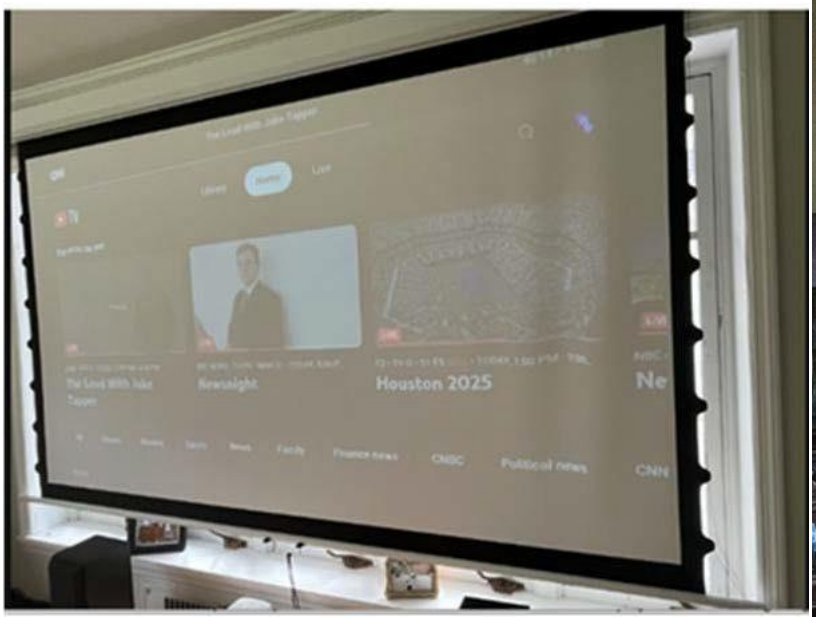

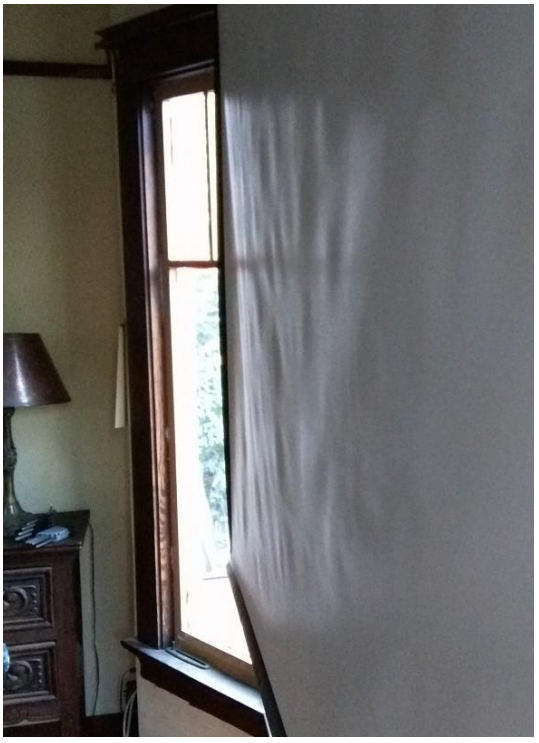

If you require further assistance, please do not hesitate to contact our team by emailing us at info@eliteproav.com