Manual Tab-Tension Pro Series | CineGrey 4D

Ceiling Ambient Light Rejecting Manual Pull-Down Projector Screen

User's Guide – V1.0 (H Type)

Visit www.eliteproav.com for latest updated version.

Thank you for choosing the Manual Tab-Tension Pro projection screen!

Product Description: The Manual Tab-Tension Pro screen is a retractable pull-down projector screen for wall and ceiling installations. It utilizes our ***CineGrey 4D*** front projection surface which is ***ISF Certified*** for accurate color reproduction in a dark room but also designed to combat ceiling ambient light to enhance picture brightness and improve picture contrast. The ***CineGrey 4D*** is best for family rooms, educational facilities, conference rooms, house of worship or any applications in which incident light is a factor.

Compatible only with Standard Throw projectors.

Please be sure to read the precautions and operating instructions carefully before using the screen. Proper maintenance and handling will ensure a longer lifespan of the product.

Elite ProAV allows a 1.5% tolerance within the viewing surface for expansion and contraction of the screen materials over time.

In order for the CineGrey 4D to maintain its projection qualities and optimum performance please refer to the list below for proper maintenance and cleaning.

Care & Use Instructions

- ***Dust, dirt, and scratches on the projection surface will affect the picture quality, please take note of the points below to prevent that from occurring:***

1. Do not touch the projection surface with your hands.
2. Do not write or draw on the projection surface.
3. Do not use fingers or sharp objects to point to the projection surface; this will damage the screen material.
4. Please clean the dust on the screen surface with a soft brush or microfiber cloth (rough towel or cloth may damage the screen's surface).
5. Use a soft-damp cloth to clean the projection surface; do not use chemical cleaning agents or alcohol.
6. Gently wipe the screen with a lightly moistened microfiber cloth with mild soap diluted in water and do not rub against the material to clean it. ***Wipe very gently when needed from left to right only***.

- When the screen is operated, it may cause slight waves on the left/right black masking border ends. If this happens, open the screen to its full extent (not passed the STOP point) to allow the material to smooth out for a few hours.
- To avoid damage and injury, the screen should only be operated by adults.

SHIPPING BRACKETS REMOVAL

WARNING!
PLEASE READ BEFORE INSTALLING!

Please note: Before fully operating the screen. Remove the shipping brackets from the housing and the weight bar by loosening the 4 screws.

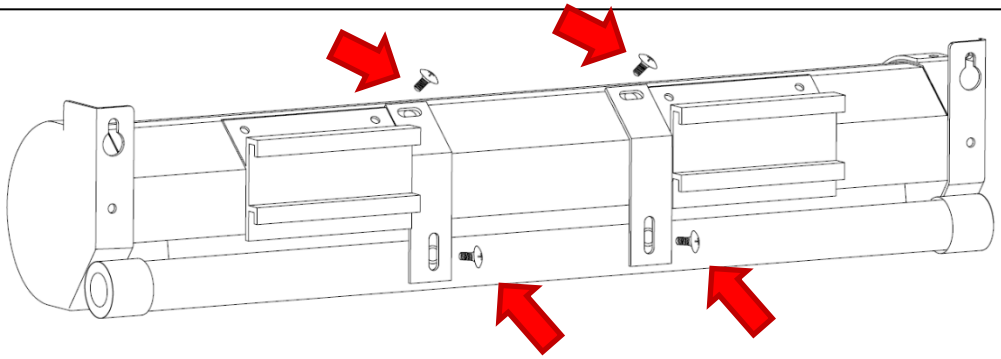

Notice to Installer:

For CineGrey 4D models only

Please use the following installation instructions to obtain superior optical performance from the CineGrey 4D Angular Reflective ALR (Ambient Light Rejecting) Screen.

Make sure to follow these instructions in order for the CineGrey 4D to perform correctly.

- Angular-Reflective material is not compatible with ultra/short-throw projectors
- Minimum lens throw ratio 1.5x image width – For standard long throw projectors only.

Not compatible with Ultra-short or Short-throw projectors.

- Ambient light must not come from the same direction as the projector

Since angular-reflective means that the projected image will reflect at the mirror-opposite angle, it is important to position the projector so that the viewer will get the best possible image.

Step 1: Establish the general "eye level" of the viewers.

Step 2: Set the appropriate projection level.

Correct Installation Examples

Projector Ceiling Installation: Make sure the projector *(light in)* is angled **(A)** to reflect **(B)** at the mirror-opposite angle *(light out)* to align with the viewer's eye level.

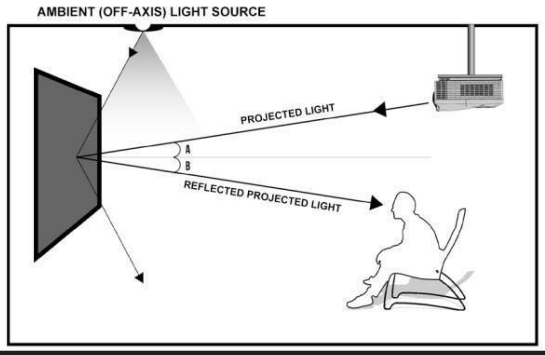

Projector Table Top: Make sure the projector (*light in*) is angled **(A)** to reflect **(B)** at the mirror-opposite angle (*light out*) to align with the viewer's eye level.

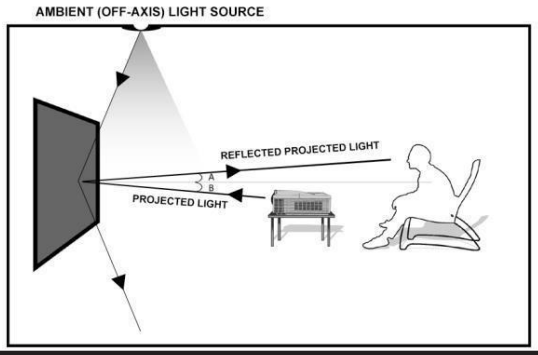

Incorrect Installation Examples

Ceiling Mounted Short-throw Projector

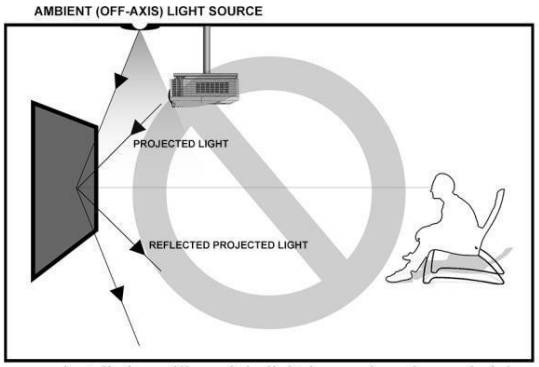

Tabletop Ultra-Short throw Projector

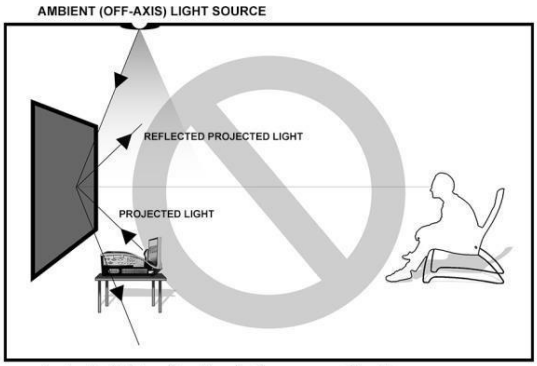

Note: Improper installation will result in light loss and produce a dark image. This is due to the projector's light reflecting in the wrong direction.

Images are not up to scale and are for illustration purposes only.

Note: Wall screws included with this product are complimentary and may not be adequate for all mounting surfaces. Consult with a professional installer or hardware store for proper mounting screws and anchors. Regardless of the mounting method, the screen should be securely supported so that the vibration or pulling on the viewing surface will not cause the screen case to become loose or fall. The installer must ensure that the proper mounting hardware and fasteners used are of adequate strength and suitable for the mounting surface.

Hardware and Parts List

Please make sure all parts listed below are included before proceeding with the installation.

A. Bracket x 2	B. M5x11mm screw x 4	C. M5 Nut x 4	D. M5x60 screw & Dry-wall anchor x 6	E. Wall/Ceiling mount bracket x 2	F. M5x50mm screw x 2
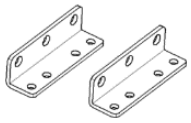	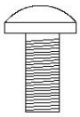	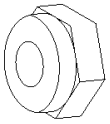		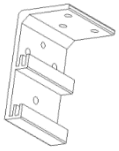	

Installation instructions

For installation assistance, please consult a professional Installer. Elite ProAV is not liable for faulty installations.

A. Wall Mount

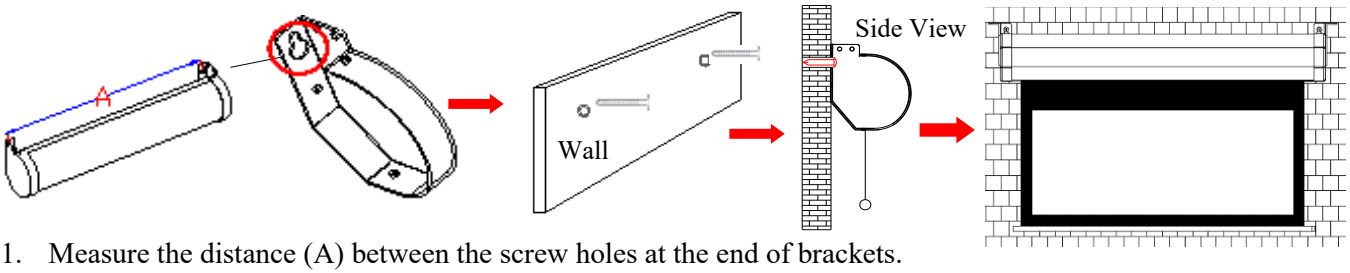

1. Measure the distance (A) between the screw holes at the end of brackets.
2. Drill two holes on the wall according to the distance (A) and insert the ***dry-wall anchor*** and ***M5x60 screw***, leaving 10mm of the screw protruding from the wall.
   Two or more people are required while one holds the screen in place.
3. Mount the product onto the screw.
4. Make sure the screen is properly leveled.

B. Ceiling Mount

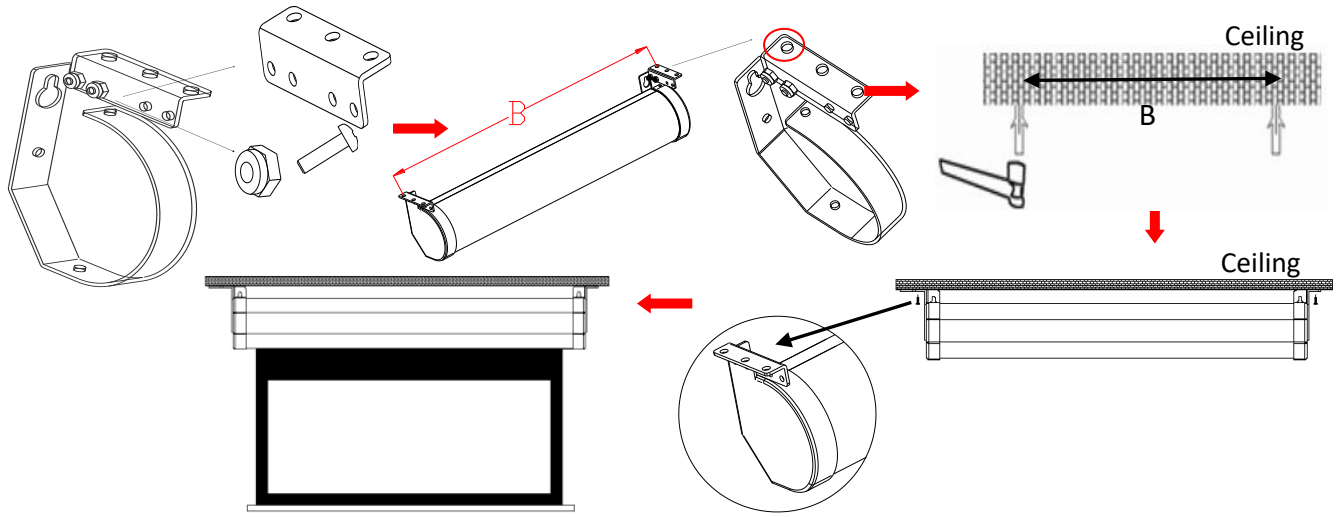

1. Attach the ***Bracket*** (A) to each side end cap using the ***M5x11 Bolt Screw and M5 Nut (B / C).***
2. Measure the distance B between the screw holes on the brackets. Drill 3 holes for each side on the ceiling according to distance B. Wood stud installation recommended but if not available, use dry-dry anchors.
3. Insert the dry wall anchor and secure using a hammer.
   Two or more people are required while one holds the screen in place.
4. Align the hole position of the bracket with the drilled holes on the ceiling, and secure with ***M5x60 screw***.
5. Make sure the screen is properly leveled.

C. Wall Mount

This mount method allows the screen to slide horizontally.

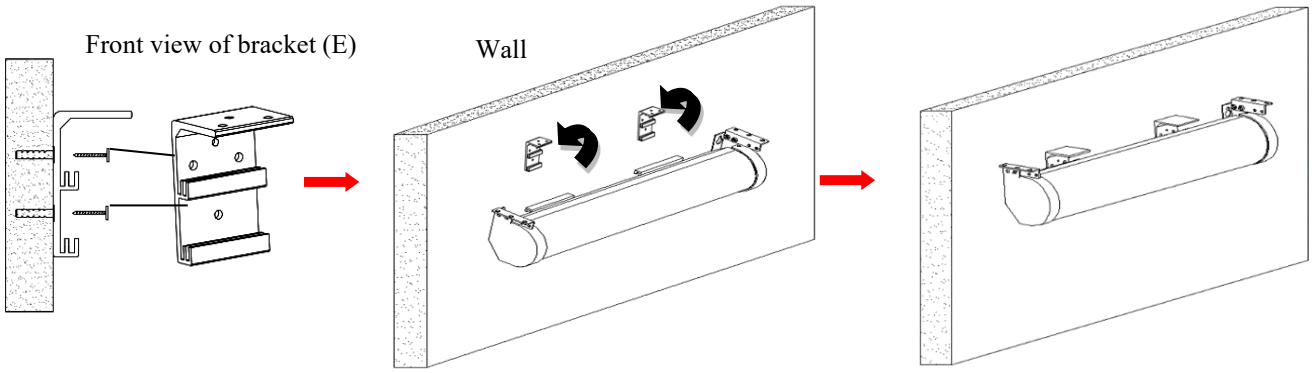

Two or more people are required while one holds the screen in place.

1. Determine where the screen will be installed. Then, measure and mark the distance between the set of screw holes from each **Wall/Ceiling mount bracket** (A).

2. Drill a hole on all marked points and install the brackets with the ***dry-wall anchor***(C), ***M5x60 screw*** (B), Make sure both brackets are properly leveled.

3. Hang the screen by placing the ***lower*** "catch" located on the back over the bracket's ***upper*** "catch".

4. Screw the M5x50mm screws (F) into the upper hole of the bracket to add additional support for the screen.

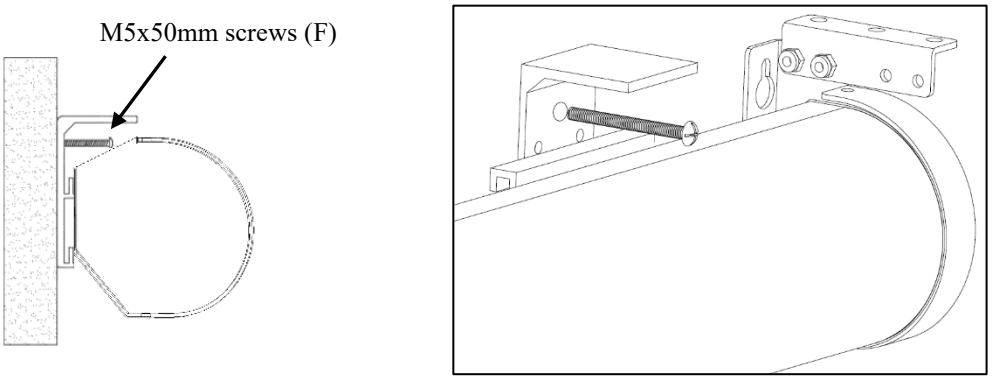

5. After making sure the screen is secured, you can slide it left / right within 3" (80 mm) of the backet's center position. (A = 3" / 80mm)

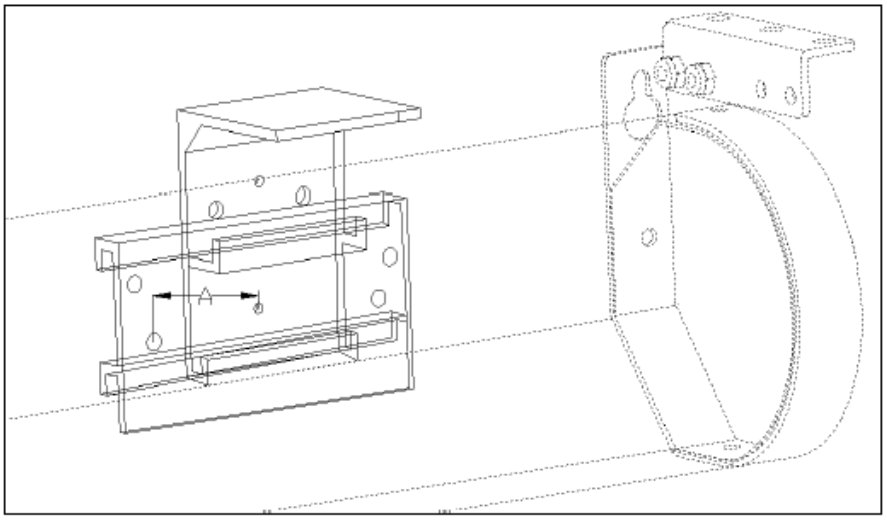

SCREEN OPERATION

CAUTION: Do not let go of the handle when retracting the screen to avoid damage from slamming up.

Note: **Always** pull the screen down or let it up in a 90-degree vertical angle. Do not allow the screen to touch the screen case when the screen goes up or comes down to avoid damaging the screen material's projection surface.

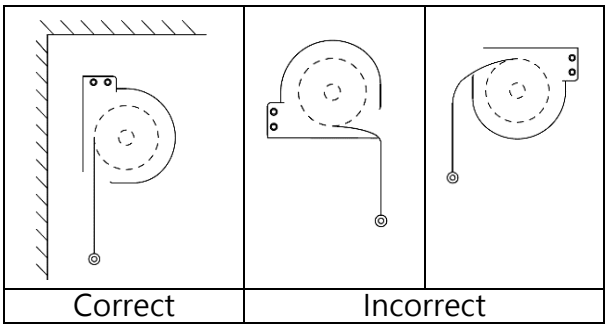

1. Pull the screen down from the lanyard or the handle only at a 90-degree angle. **NEVER** attempt to pull the screen down by the surface or touch the screen, as it will damage the screen and void the warranty.

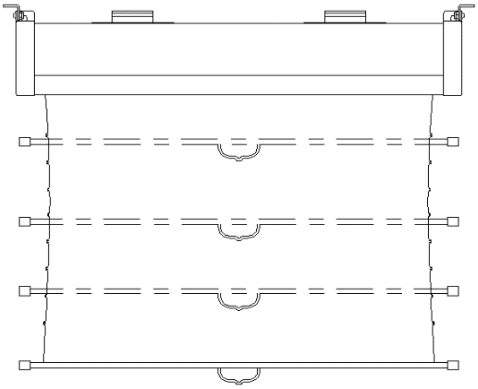

Pull straight down and allow the screen to come up to lock into the desired position.

TIP: Pull the screen material down to its full extent (not passed the STOP label) to ensure maximum flatness.

DO NOT try to pull the screen beyond the STOP label. This may cause the screen material to come off the roller and/or disengage from the retraction mechanism which will make the screen inoperable and void warranty coverage.



2. To retract the screen, simply pull the screen downward from the handle or lanyard more than 2 inches (5cm) and allow the screen to slowly retract by smoothly guiding it up gently into the housing.

NOTE: *Always release at a 90-degree angle and do not let go until the screen is entirely inside the case. If ever the screen feels stuck, keep in mind that the screen's mechanism is new and needs to be run up/down a few times to loosen up. If this happens, carefully with a little force yank the screen straight down to unlock the screen.*

ATTENTION: *Always retract the screen when not in use to avoid the screen material from deforming.*

For more information, technical support or your local Elite ProAV contact, please visit www.eliteproav.com